UL 891

STANDARD FOR SAFETY

Switchboards

Document Was Downloaded By Trijot Sandhu For Use By Foxfab Power Solutions Inc Sandhu, Trijot : 3/21/2025 - 2:47 PM

Annex G
(normative)

Maximum 100 000 Ampere Short-Circuit Current Rating Without Short-Circuit Test

G1 Scope

G1.1 These requirements cover switchboard sections and current transformer compartments having a short-circuit current rating for which short-circuit tests may be waived. These requirements, which are applicable to products intended for use in Canada, Mexico or the United States, do not otherwise amend the requirements in this standard.

G2 Glossary

G2.1 For the purposes of this Annex, the following definitions apply.

G2.2 Brace – a mechanical assembly that is secured to bus bars to restrict relative motion between the bus bars.

G2.3 Support – a mechanical assembly that is secured to bus bars and that is further secured to a rigid structural member such as the enclosure or a separate member secured to the framework.

G3 Construction

G3.1 General

G3.1.1 A maximum short-circuit current rating as shown in Table G3.1 may be assigned to a through bus (which includes a splice bus), a tap, and a section bus, of a switchboard rated as specified in Table G3.1 without conducting short-circuit tests if all the following conditions are met:

a) The construction complies with the requirements in G3.1.2 – G3.3.5.

b) The performance complies with requirements in G4.1.1 – G4.3.1.

c) The switchboard is marked in accordance with G5.1.

G3.1.2 For a maximum assigned short-circuit current rating of 100 000 A, the switchboard (consisting of one or more sections) shall contain a single integral main molded-case circuit breaker, AC power circuit breaker, or fused switch having a short-circuit rating not less than that of the switchboard, or shall be marked for use with a remote device of one of these types as covered in 6.2.1.14 having a short-circuit current rating not less than that of the switchboard. Supply bus bars ahead of the main overcurrent protective device shall be located in the same section or an adjacent section.

G3.1.3 Copper or aluminum bus bars shall be minimum 6.4 mm (1/4 inch) thick and have a width as described in Table G3.1; holes in bus bars shall not be larger than 11.1 by 20.7 mm (0.438 by 0.813 inch) with the larger dimension limited to use along the axis of the bus bar.

Exception: Larger holes may be provided as specified in G3.1.4 for provision of current transformers.

G3.1.4 With regard to Figure G3.1, copper or aluminum bus bars shall be minimum 6.4 mm (1/4 inch) thick and 50.8 – 102 mm (2 – 4 inches) wide; holes in bus bars at supports shall not be larger than 10.3 by 19.1 mm (0.406 by 0.750 inch) and holes for bus bar type current transformers shall not be larger than 14.3 by 35.7 mm (9/16 by 1-13/32 inches). A bus bar shall be prevented from rotating by means other than the mounting bolt specified in G3.3.3.

Document Was Downloaded By Trijot Sandhu For Use By Foxfab Power Solutions Inc Sandhu, Trijot : 3/21/2025 - 2:47 PM

ULSE INC. COPYRIGHTED MATERIAL – NOT AUTHORIZED FOR FURTHER REPRODUCTION OR DISTRIBUTION WITHOUT PERMISSION FROM ULSE INC.

Table G3.1
Switchboard ratings and characteristics

(See G3.1.1, G3.1.3, G3.1.7, G3.2.1, G3.2.2 and Figure G3.2, and Figure G3.4 – Figure G3.9)

Max. RMS sym. short- circuit current	Min. ampere rating	Max. ampere rating	Max. voltage rating (single or three- phase, or DC)	Min. bus bar width		Max. bus bar width[a]		Bus bars FF or EE[b]	No. of phases	Minimum distance between opposite polarity bus bars[c]				Maximum distance between supports or fraction thereof[d]		Ref. Figures
										Closest point		Center to center				
amps	amps	amps	volts	in.	(mm)	in.	(mm)			in.	(mm)	in.	(mm)	in.	(mm)	
100 000[e]	800	4 000[f]	480[f]	4	102	7	178	EE	3	1	25.4	5	127	21[g]	533	Figure G3.2 – Figure G3.6
									1	2[g]	50.8	6[g]	152			
100 000[e]	800	4 000[f]	480[f]	4	102	7	178	FF	3	4	102	6	152	13[h]	330	Figure G3.7
									1	5	127	7	178			
65 000	800	4 000[f]	480[f]	4	102	7	178	EE	3	1	25.4	5	127	21[g]	533	Figure G3.2 – Figure G3.6
									1	2[g]	50.8	6[g]	152			
65,000	800	4,000[f]	480[f]	4	102	7	178	FF	3	4	102	6	152	21[i]	533	Figure G3.7
									1	5	127	7	178			
50 000	800	4 000[f]	480[f]	2	50.8	4	102	EE[j]	3	1-1/2	38.1	3-1/2	88.9	14	356	Figure G3.2 – Figure G3.6
									1	2	50.8	6	152			
50 000	800	4 000[f]	480[f]	2	50.8	4	102	FF	3	4	102	6	152	21[i]	533	Figure G3.7
									1	5	127	7	178			
42 000	200	1500	480	2	50.8	4	102	EE[j]	1,3	5	127	9	229	21	533	Figure G3.1

[a] Bus bars minimum 6.4 mm (1/4 inch) thick aluminum or copper, one to four per phase. Refer to G3.1.3 and G3.1.4 for mounting and support hole size.

[b] Refer to G3.1.7 (EE – bus bars arranged edge to edge; FF – bus bars arranged face to face).

[c] Refer to G3.2.2 – G3.2.5 and Figure G3.8 and Figure G3.9. Spacing between bus bars crossing at right angles may be as covered in G3.2.3.

[d] Refer to G3.1.4 – G3.3.5 and Figure G3.1 – Figure G3.7, Figure G4.1, and Figure G4.2.

[e] Integral or remote main circuit breaker or fused switch required as described in G3.1.2 . Ratings are not applicable to a tap.

[f] The maximum voltage rating may be 600 V if the current rating does not exceed 2 000 A.

[g] The minimum distance may be 25.4 mm (1 inch) for the closest point and 127 mm (5 inches) center to center if the distance between supports is no more than 432 mm (17 inches).

[h] Supports may be located a maximum of 1219 mm (48 inches) apart if braces are located maximum 330 mm (13 inches) apart. See Figure G3.7.

[i] Supports may be located a maximum 1219 mm (48 inches) apart if braces are located maximum 533 mm (21 inches) apart. See Figure G3.7.

[j] Bus bars greater than 50.8 mm (2 inches) in width may be L-shaped as covered in the Exception to G3.1.5.

Document Was Downloaded By Trijot Sandhu For Use By Foxfab Power Solutions Inc Sandhu, Trijot : 3/21/2025 - 2:47 PM

ULSE INC. COPYRIGHTED MATERIAL – NOT AUTHORIZED FOR FURTHER REPRODUCTION OR DISTRIBUTION WITHOUT PERMISSION FROM ULSE INC.

Figure G3.1
Current transformer (CT) compartment

(See Clauses G3.1.4, G3.1.7, G3.3.4, G3.3.5 and Table G3.1)

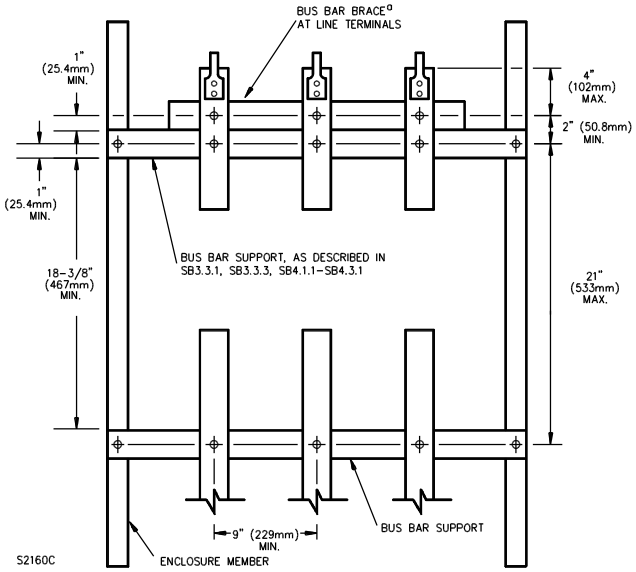

NOTE – Constructions shown in Figure G3.2 – Figure G3.6 may also be used at connection to current transformers.

[a] See G3.3.5.

Document Was Downloaded By Trijot Sandhu For Use By Foxfab Power Solutions Inc Sandhu, Trijot : 3/21/2025 - 2:47 PM

ULSE INC. COPYRIGHTED MATERIAL – NOT AUTHORIZED FOR FURTHER REPRODUCTION OR DISTRIBUTION WITHOUT PERMISSION FROM ULSE INC.

Figure G3.2

Location of supports for edge-to-edge connection of bus bars for a switchboard marked for use without a main or for use with a remote main

(See G3.1.7, G3.2.3, G3.3.4, Figure G3.1, Figure G3.3, Figure G3.5, Figure G3.6, Figure G3.7 and Table G3.1)

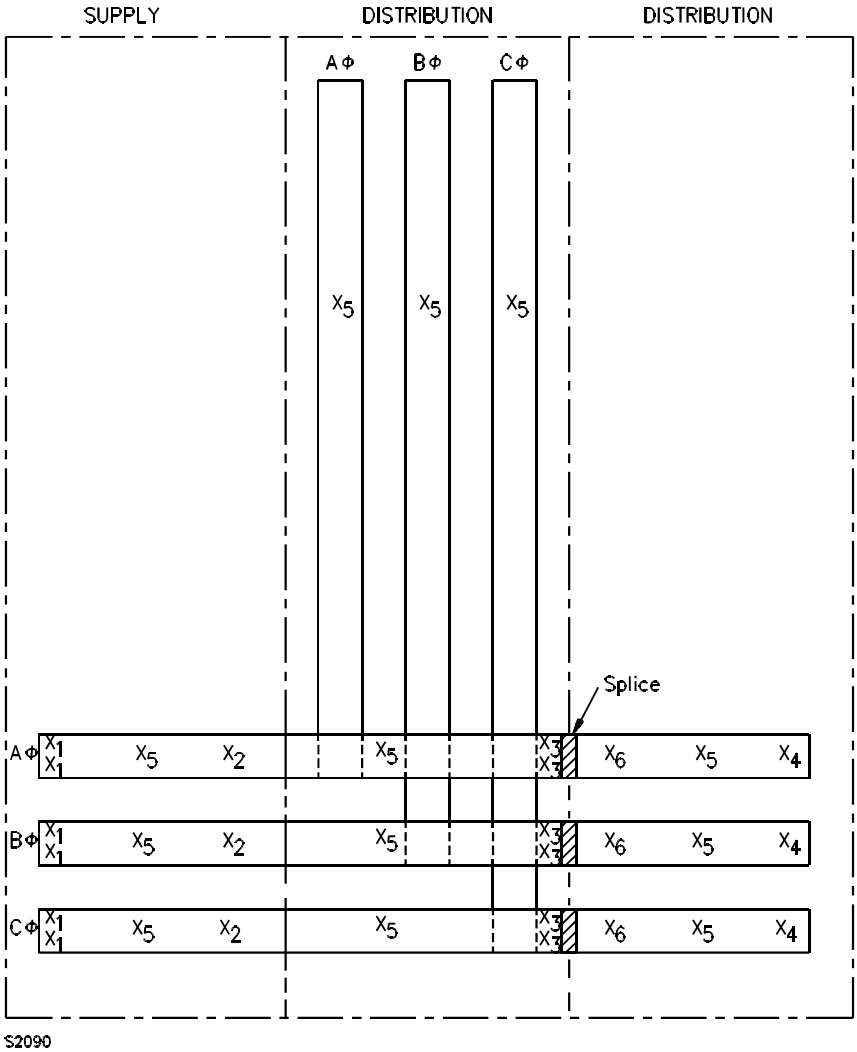

In which:

X – Bus supports (bolts to nonmetallic channel, standoff insulator, or steel channel) as shown in Figure G3.10 – Figure G3.12.

X_1X_1 – Two at end of bus in supply section except that one support may be used with a single bus bar 50.8 – 76.2 mm (2 – 3 inches) wide with a short-circuit current rating of 50 000 A or less.

X_2 – At end of section. One support when horizontal bus is continuous.

X_3X_3 – When splice plate is used, two supports for copper bus, one support for aluminum bus, except that one support may be used for a single copper bus bar 50.8 – 76.2 mm (2 – 3 inches) wide with a short-circuit current rating of 50 000 A or less.

X_4 – One support required at end of horizontal bus.

X_5 – One support required at intervals as described in Table G3.1. Connection of vertical bus to horizontal bus may serve as a support for the vertical bus but not for the horizontal bus. See G3.2.3 for spacings between bus bars at cross-overs.

X_6 – At the load of splice bus, one support required.

Document Was Downloaded By Trijot Sandhu For Use By Foxfab Power Solutions Inc Sandhu, Trijot : 3/21/2025 - 2:47 PM

ULSE INC. COPYRIGHTED MATERIAL – NOT AUTHORIZED FOR FURTHER REPRODUCTION OR DISTRIBUTION WITHOUT PERMISSION FROM ULSE INC.

Figure G3.3

Location of supports for right-angle connection of edge-to-edge bus bars for a switchboard without a main or marked for use with a remote main

(See Clause G3.1.7, G3.2.3, G3.3.4, Figure G3.1, Figure G3.7 and Table G3.1)

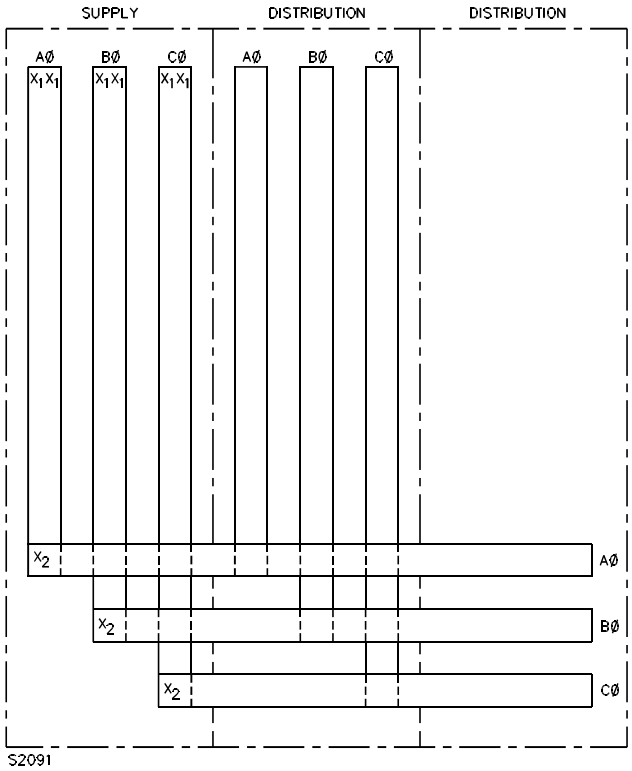

In which:

X_1X_1 – Two supports required at line terminal end except one support may be used for single bus bar 50.8 – 76.2 mm (2 – 3 inches) wide with a short-circuit current rating of 50 000 A or less.

X_2 – One support required at connection of vertical to horizontal bus or as shown in Figure G3.4.

Note – For all other supports see Figure G3.2.

Document Was Downloaded By Trijot Sandhu For Use By Foxfab Power Solutions Inc Sandhu, Trijot : 3/21/2025 - 2:47 PM

ULSE INC. COPYRIGHTED MATERIAL – NOT AUTHORIZED FOR FURTHER REPRODUCTION OR DISTRIBUTION WITHOUT PERMISSION FROM ULSE INC.

Figure G3.4
Distance between supports

(See Clauses G3.1.7, G3.2.3, G3.3.4, Figure G3.1, Figure G3.3, Figure G3.5, Figure G3.6 and Table G3.1)

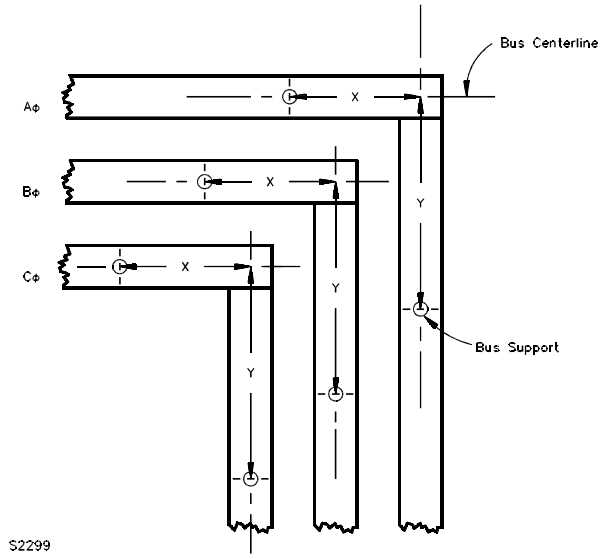

Distance X+Y equals maximum distance allowed between supports.

Distance X plus Y is maximum distance between supports as shown in Table G3.1.

Document Was Downloaded By Trijot Sandhu For Use By Foxfab Power Solutions Inc Sandhu, Trijot : 3/21/2025 - 2:47 PM

ULSE INC. COPYRIGHTED MATERIAL – NOT AUTHORIZED FOR FURTHER REPRODUCTION OR DISTRIBUTION WITHOUT PERMISSION FROM ULSE INC.

Figure G3.5

Location of supports for edge-to-edge connection of bus bar with cables connected directly to main

(See Clauses G3.1.7, G3.2.3, G3.3.4 and Table G3.1)

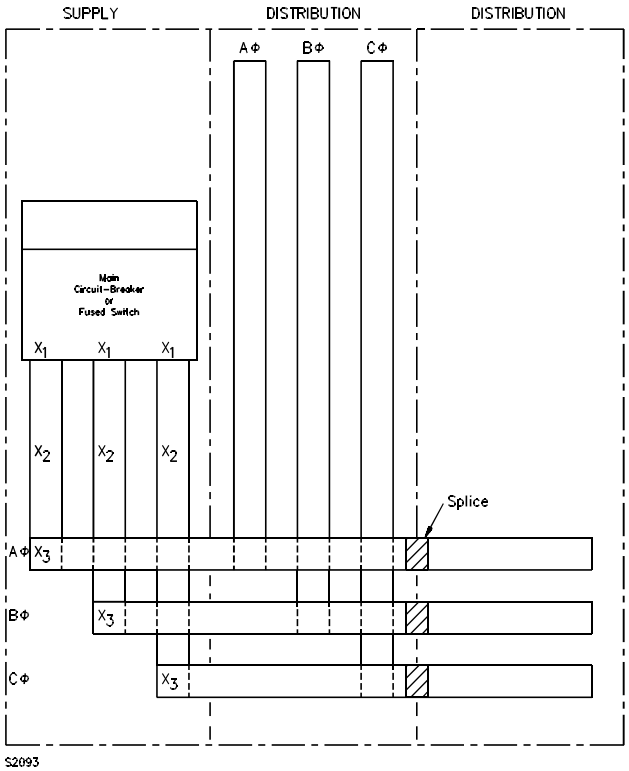

In which:

X_1 – For the purposes of determining distances from Table G3.1, this point is considered a support.

X_2 – One support required at intervals as specified in Table G3.1.

X_3 – Support at connection of vertical bus to horizontal or as shown in Figure G3.4.

Note – For all other supports see Figure G3.2.

Document Was Downloaded By Trijot Sandhu For Use By Foxfab Power Solutions Inc Sandhu, Trijot : 3/21/2025 - 2:47 PM

ULSE INC. COPYRIGHTED MATERIAL – NOT AUTHORIZED FOR FURTHER REPRODUCTION OR DISTRIBUTION WITHOUT PERMISSION FROM ULSE INC.

Figure G3.6

Location of supports for right-angle connection of edge-to-edge bus bar with cables not connected directly to main

(See Clauses G3.1.7, G3.2.3, G3.3.4, Figure G3.1, and Table G3.1)

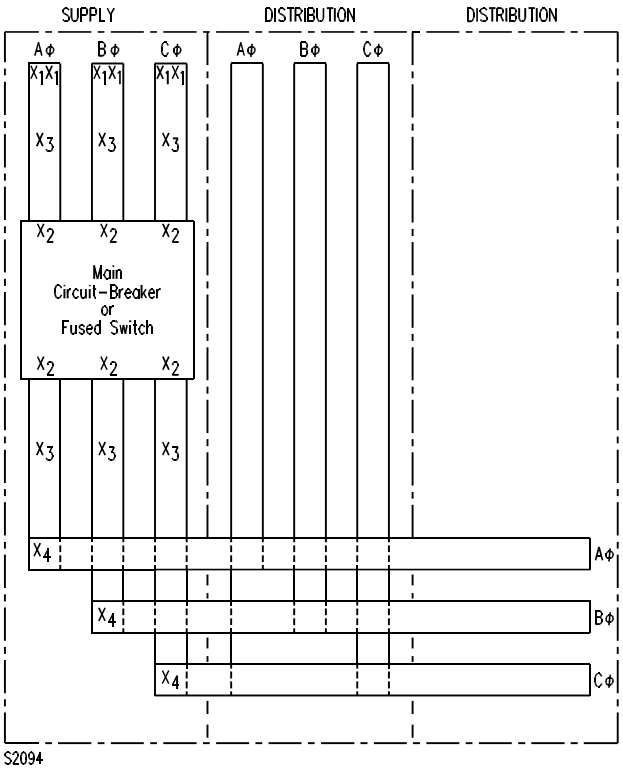

In which:

X_1X_1 – Two supports required at line terminal and except only one support may be used for a single bus bar 50.8 – 76.2 mm (2 – 3 inches) wide with a short-circuit current rating of 50 000 A or less.

X_2 – For the purposes of determining distances from Table G3.1, this point is considered a support.

X_3 – One support required at intervals as specified in Table Table G3.1.

X_4 – One support required at connection of vertical to horizontal bus or as shown in Figure G3.4.

Note – For all other supports see Figure G3.2.

Document Was Downloaded By Trijot Sandhu For Use By Foxfab Power Solutions Inc Sandhu, Trijot : 3/21/2025 - 2:47 PM

ULSE INC. COPYRIGHTED MATERIAL – NOT AUTHORIZED FOR FURTHER REPRODUCTION OR DISTRIBUTION WITHOUT PERMISSION FROM ULSE INC.

Figure G3.7

Location of supports and braces for face-to-face connection of bus bars

(See Clauses G3.1.7, G3.2.3, G3.3.4, and Table G3.1)

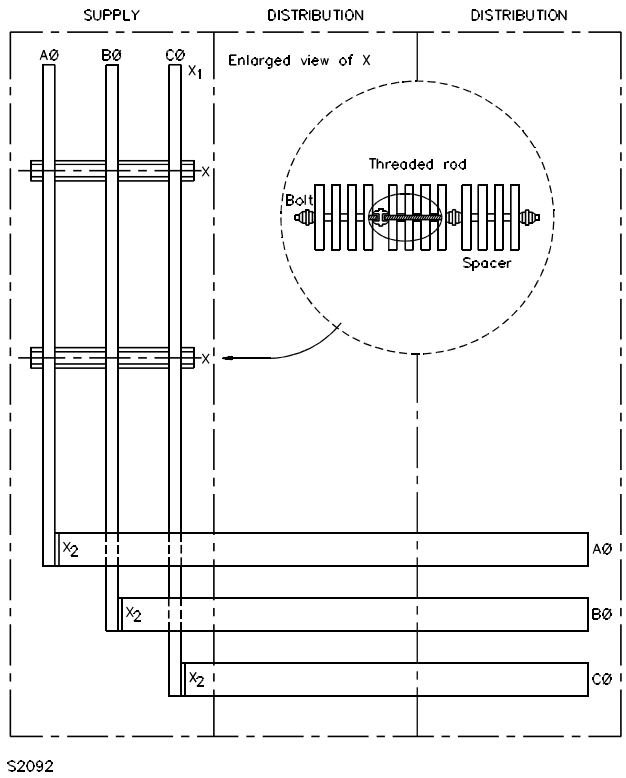

In which:

X_1 – Line connection – support provided by transformer or busway stub connected to enclosure.

X – Mechanical bracing between bus bars, support located at intervals described in Table G3.1 starting at X_1. Bracing not required to be secured to enclosure.

X_2 – One support located not more than 1.2 m (48 inches) from X_1. For supports along horizontal bus see Figure G3.2 and Figure G3.3. See G3.2.3 for spacing between bus bars at cross over.

Document Was Downloaded By Trijot Sandhu For Use By Foxfab Power Solutions Inc Sandhu, Trijot : 3/21/2025 - 2:47 PM

ULSE INC. COPYRIGHTED MATERIAL – NOT AUTHORIZED FOR FURTHER REPRODUCTION OR DISTRIBUTION WITHOUT PERMISSION FROM ULSE INC.

Figure G3.8

Distances between edge-to-edge bus bars of opposite polarity

(See Clauses G3.1.7, G3.2.1, and Table G3.1)

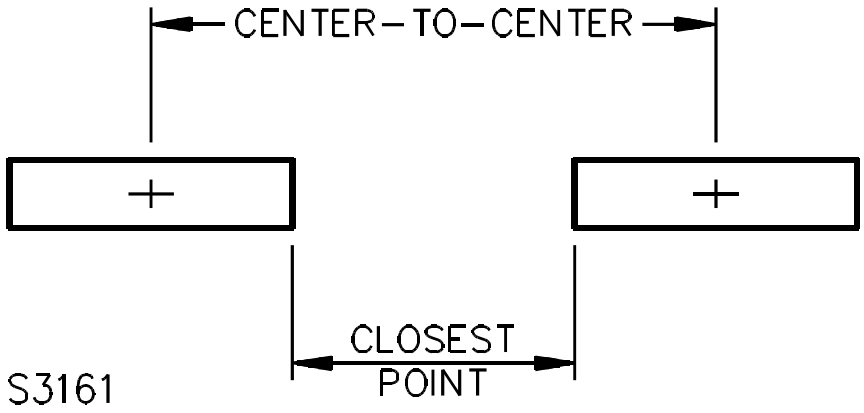

Figure G3.9

Distances between face-to-face bus bars of opposite polarity

(See Clauses G3.1.7, G3.2.2, and Table G3.1)

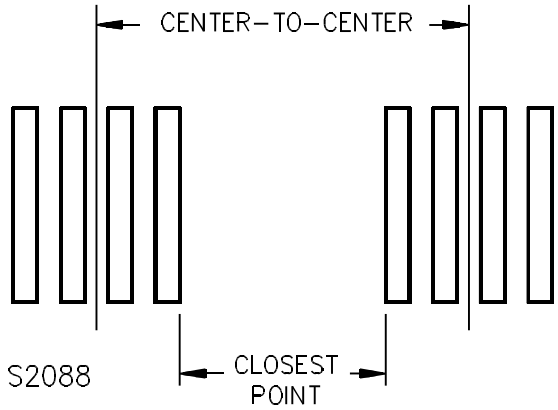

Document Was Downloaded By Trijot Sandhu For Use By Foxfab Power Solutions Inc Sandhu, Trijot : 3/21/2025 - 2:47 PM

ULSE INC. COPYRIGHTED MATERIAL – NOT AUTHORIZED FOR FURTHER REPRODUCTION OR DISTRIBUTION WITHOUT PERMISSION FROM ULSE INC.

Figure G3.10

Steel channel bus bar support dimension

(See Clause G3.3.1 and Figure G3.2)

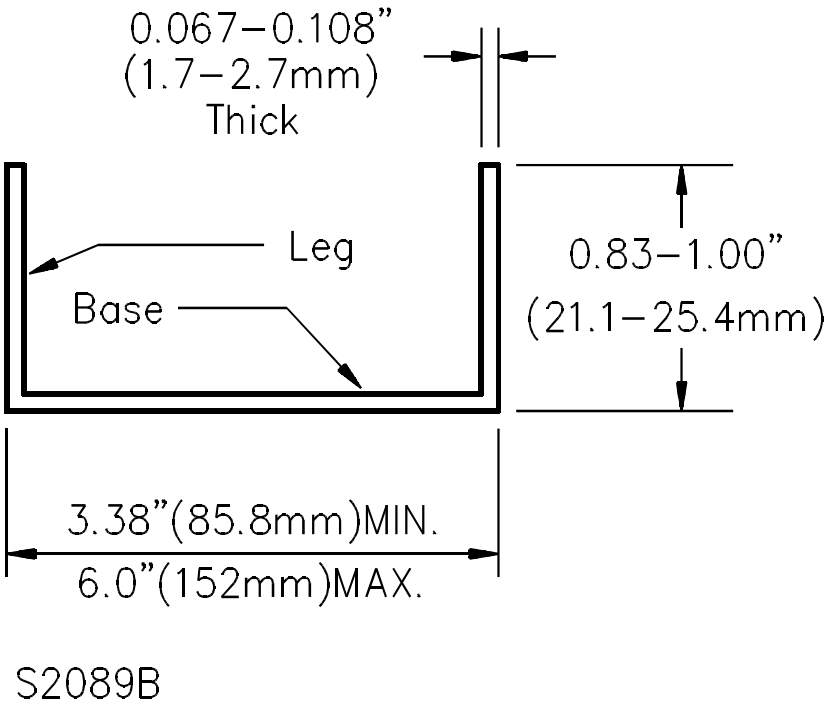

Document Was Downloaded By Trijot Sandhu For Use By Foxfab Power Solutions Inc Sandhu, Trijot : 3/21/2025 - 2:47 PM

ULSE INC. COPYRIGHTED MATERIAL – NOT AUTHORIZED FOR FURTHER REPRODUCTION OR DISTRIBUTION WITHOUT PERMISSION FROM ULSE INC.

Figure G3.11

Bus bar support with standoff insulators mounted on leg of steel channel

(See Clause G3.3.1 and Figure G3.2)

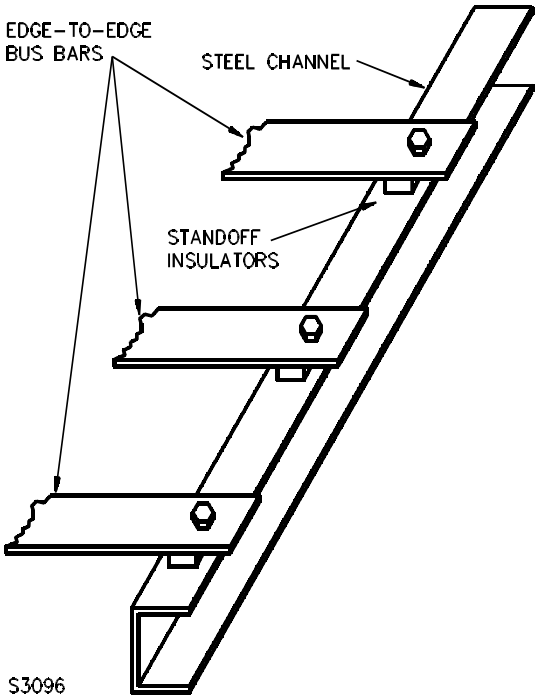

Document Was Downloaded By Trijot Sandhu For Use By Foxfab Power Solutions Inc Sandhu, Trijot : 3/21/2025 - 2:47 PM

ULSE INC. COPYRIGHTED MATERIAL – NOT AUTHORIZED FOR FURTHER REPRODUCTION OR DISTRIBUTION WITHOUT PERMISSION FROM ULSE INC.

Figure G3.12

Bus bar support with standoff insulators mounted on base of steel channel

(See Clause G3.3.1 and Figure G3.2)

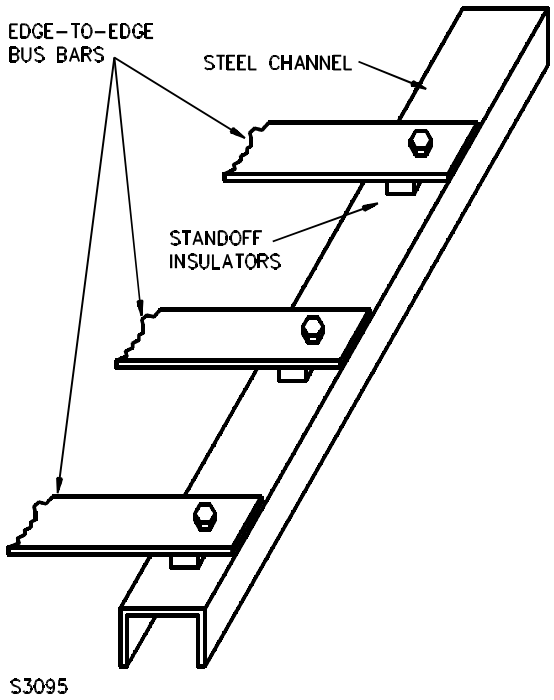

G3.1.5 Bus bar configurations shall be flat and rectangular.

Exception: An L-shaped bus bar may be used if:

a) considered as a face to face configuration or

b) the unsupported leg does not extend more than 50.8 mm (2 inches) from the bus support.

G3.1.6 The number of bus bars shall not exceed four for each phase.

G3.1.7 Phase bus bars, including neutral bus bars, shall be arranged edge-to-edge or face-to-face as described in Table G3.1 and as shown in Figure G3.1 – Figure G3.9.

Exception: A neutral bus bar need not comply with this requirement if the spacing between the adjacent surface of the neutral bus bar and the nearest phase bus bar is:

a) at least 133 mm (5-1/4 inches); or

b) 127 mm (5 inches) if the short-circuit current rating of the switchboard does not exceed 50 000 A.

G3.1.8 Stacked bus bars shall not exceed a height of 44.5 mm (1-3/4 inches) measured from the top of the standoff insulator or non-metallic channel base to the top of the highest bus bar.

Exception No. 1: At a splice bus or a joint, the height of stacked bus bars shall not exceed 50.8 mm (2 inches).

Document Was Downloaded By Trijot Sandhu For Use By Foxfab Power Solutions Inc Sandhu, Trijot : 3/21/2025 - 2:47 PM

ULSE INC. COPYRIGHTED MATERIAL – NOT AUTHORIZED FOR FURTHER REPRODUCTION OR DISTRIBUTION WITHOUT PERMISSION FROM ULSE INC.

Exception No. 2: The height may be greater than 1-3/4 inches for constructions using L-shaped bus bars as specified in the Exception to G3.1.5.

G3.2 Spacings

G3.2.1 The spacing between adjacent edges of bus bars of opposite polarity, arranged or mounted edge-to-edge as shown in Figure G3.8, shall not be less than as described in Table G3.1. The center-to-center distance shall also be not less than as shown in Table G3.1. The distance between bolts to standoff insulators or non-metallic channels along the bus bar shall comply with the dimensions specified in Table G3.1. Bus bars to which terminal connectors are secured shall extend not more than 102 mm (4 inches) from the center of the first bolt to the closest support.

G3.2.2 The center-to-center spacing between adjacent groups of bus bars of opposite polarity, arranged or mounted face-to-face as shown in Figure G3.9, shall not be less than as described in Table G3.1. The distance between closest points of opposite polarity shall also be not less than as shown in Table G3.1.

G3.2.3 The spacing between bus bars crossing at right angles as shown in Figure G3.2, Figure G3.3, Figure G3.5, Figure G3.6, and Figure G3.7 shall not be less than 25.4 mm (1 inch).

G3.2.4 The spacing between live parts of bus bars mounted or arranged edge-to-edge and grounded dead metal shall not be less than 34.9 mm (1-3/8 inch) in any direction. A barrier shall be disregarded when measuring this spacing.

Exception: The spacing between the flat face of an insulated neutral bus bar and grounded dead metal shall not be less than 12.7 mm (1/2 inch) for a short-circuit current rating of 42 000 A or less.

G3.2.5 The spacing between live parts of bus bars mounted or arranged face-to-face and grounded dead metal, measured perpendicular to the face of the bus bar, shall not be less than 152 mm (6 inches); and, measured perpendicular to the edge of the bus bar, shall not be less than 34.9 mm (1-3/8 inches). A barrier shall be disregarded when measuring this spacing.

Exception No. 1: The spacing between the flat face of a neutral bus bar measured perpendicular to the face of the bus bar and grounded dead metal shall not be less than 50.8 mm (2 inches).

Exception No. 2: The spacing to grounded metal may be 1-3/8 inches minimum within 76.2 mm (3 inches) of the bus bar support.

G3.3 Supports

G3.3.1 A standoff insulator support used for direct support of live parts shall be secured by a bolt of the type described in G3.3.3 to a steel channel having the dimensions shown in Figure G3.10. The bolt shall pass through a clearance hole in the steel channel and shall not thread into it. Typical constructions are shown in Figure G3.11 and Figure G3.12.

Exception: A non-metallic channel that is investigated in accordance with G4.1.1 – G4.3.1 may be used in place of the standoff insulator and steel channel.

G3.3.2 A bus bar shall be secured to a standoff insulator, a non-metallic channel, or a splice bus bar by a bolt of the type described in G3.3.3.

G3.3.3 A bolt used to secure a bus bar or standoff insulator shall be 3/8-16 steel or larger and shall be torqued to 27.1 N·m (20 pound-feet). A steel washer with an outside diameter of 25.4 mm (1 inch) or larger and a maximum inside diameter of 14.3 mm (9/16 inch) shall be located between the bolt head and the bus bar and also between the bolt head or nut and a steel or non-metallic channel. The washer shall be minimum 2.0 mm (0.078 inch) thick. A bolt or threaded rod shall be SAE grade 5 minimum.

Document Was Downloaded By Trijot Sandhu For Use By Foxfab Power Solutions Inc Sandhu, Trijot : 3/21/2025 - 2:47 PM

ULSE INC. COPYRIGHTED MATERIAL – NOT AUTHORIZED FOR FURTHER REPRODUCTION OR DISTRIBUTION WITHOUT PERMISSION FROM ULSE INC.

G3.3.4 The spacing and number of bus supports shall be in accordance with Figure G3.1 – Figure G3.7 as applicable.

G3.3.5 The line terminal brace shown in Figure G3.1 shall be secured to the line terminal bus bars by bolts of the type described in G3.3.3.

Exception: The line terminal brace is not required in a construction having bussed line connections.

G3.4 Control, and metering connections

G3.4.1 Control, and metering devices shall be connected by insulated conductors by the termination means provided with the device. The routing of the insulated conductor shall meet the requirements in 8.8.1.8.

G3.4.2 Insulating conductors or termination means which are not provided with or integral to the device, such as braided or laminated bus bars, may be utilized where the combination has been evaluated for the application.

G3.4.3 Bus connections may be utilized for a device rated 800 A or higher.

G3.4.4 Bus connections shall be permitted to match the spacings at the point of connection of a device which has spacings less than the Table G3.1 requirements. The connecting bus bars shall be formed or arranged to comply with the Table G3.1 spacings within practical manufacturing limitations.

G3.4.5 Bus bars integral to the device or in the form of a kit shall also be permitted.

G3.5 Branch/feeder device connections

G3.5.1 Connections not of a bus bar type shall meet the requirements in 9.1.1.2.2.

G3.5.2 Bus connections shall be permitted to match the spacings at the point of connection of a device which has spacings less than the Table G3.1 requirements. The connecting bus bars shall be formed or arranged to comply with Table G3.1 spacings within 12 inches, as measured along the length of the bus bar.

G3.5.2.1 Bus connection spacings that are less than the Table G3.1 requirements shall be permitted when those connections are part of a kit that has been evaluated for use with the device.

G4 Performance

G4.1 General

G4.1.1 A standoff insulator or non-metallic channel shall be subjected to the tests described in G4.2.1 and G4.3.1. Three samples shall be subjected to each test. The results are acceptable if the standoff insulator or non-metallic channel does not crack.

G4.2 Tensile

G4.2.1 The bus bar support or representative samples shall be subjected to a minimum tensile force of 8229 N (1850 pounds) applied between the simulated enclosure supporting means and bus bar support along the centerline of the mounting bolts. See Figure G4.1 for typical constructions. The force shall be applied by machine parts moving apart at a rate of 254 mm (10 inches) per minute.

Document Was Downloaded By Trijot Sandhu For Use By Foxfab Power Solutions Inc Sandhu, Trijot : 3/21/2025 - 2:47 PM

ULSE INC. COPYRIGHTED MATERIAL – NOT AUTHORIZED FOR FURTHER REPRODUCTION OR DISTRIBUTION WITHOUT PERMISSION FROM ULSE INC.

Figure G4.1

Method of applying tensile force

(See Clause G4.2.1)

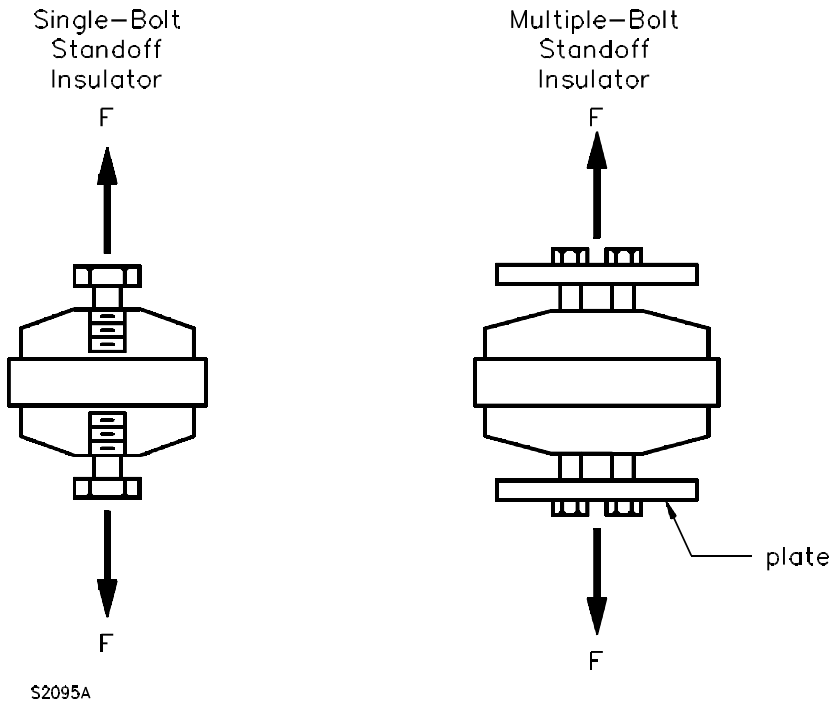

G4.3 Cantilever

G4.3.1 The standoff insulator or non-metallic channel or representative sample shall be mounted to a simulated enclosure steel plate and subjected to a minimum force of 3003 N (675 pounds), applied as specified and as shown in Figure G4.2. A 102 mm (4 inches) length of 50.8 by 6.4 mm (2 by 1/4 inches) copper bus bar shall be mounted to the support at a distance of 38.1 mm (1-1/2 inches) from the standoff insulator or non-metallic channel. Single or multiple spacers not greater than 25.4 by 25.4 mm (1 by 1 inch) are to be used. The force shall be applied perpendicular to the 2 by 1/4-inch edge of the bus bar. The force shall be applied by parts of a machine moving apart at a rate of 254 mm (10 inches) per minute.

Document Was Downloaded By Trijot Sandhu For Use By Foxfab Power Solutions Inc Sandhu, Trijot : 3/21/2025 - 2:47 PM

ULSE INC. COPYRIGHTED MATERIAL – NOT AUTHORIZED FOR FURTHER REPRODUCTION OR DISTRIBUTION WITHOUT PERMISSION FROM ULSE INC.

Figure G4.2

Method of applying force in cantilever test

(See G4.3.1)

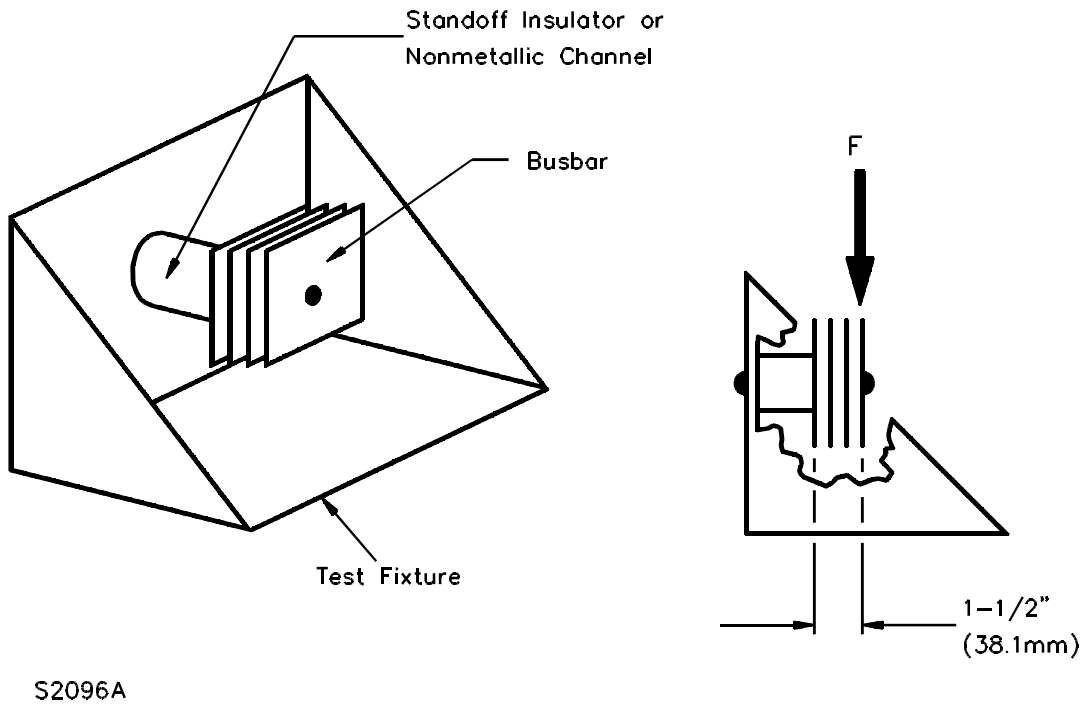

G5 Marking

G5.1 The switchboard shall be marked in accordance with 6.3.3.1 with the following or the equivalent: "Wrap line cables together and, if provided, tap cables together with nominal 9.5 mm (3/8 inch) nylon rope or rope having a minimum tensile strength of 8896 N (2000 pounds) at (1) 152 mm (6 inches) and 305 mm (12 inches) from the line terminals with five wraps and (2) every additional 6 inches with five wraps or every 25.4 mm (1 inch) with one wrap." It is also recommended that a drawing as shown in Figure G5.1, or the equivalent, be provided with the switchboard.

Document Was Downloaded By Trijot Sandhu For Use By Foxfab Power Solutions Inc Sandhu, Trijot : 3/21/2025 - 2:47 PM

ULSE INC. COPYRIGHTED MATERIAL – NOT AUTHORIZED FOR FURTHER REPRODUCTION OR DISTRIBUTION WITHOUT PERMISSION FROM ULSE INC.

Figure G5.1

Securement of cable

(See G5.1)

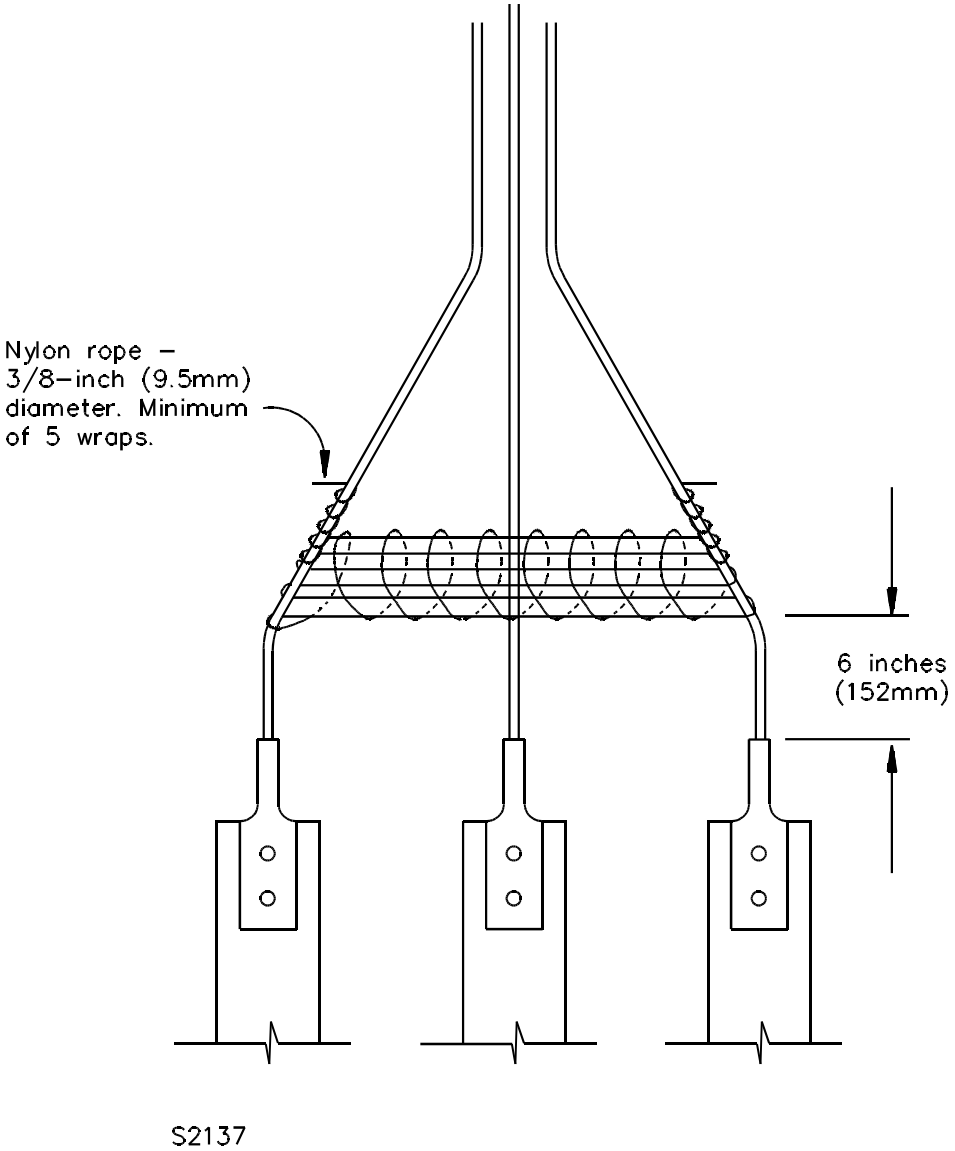

Document Was Downloaded By Trijot Sandhu For Use By Foxfab Power Solutions Inc Sandhu, Trijot : 3/21/2025 - 2:47 PM

ULSE INC. COPYRIGHTED MATERIAL – NOT AUTHORIZED FOR FURTHER REPRODUCTION OR DISTRIBUTION WITHOUT PERMISSION FROM ULSE INC.

Supplement SA
Use of Components Not UL Listed or Recognized

(For U.S. Only)

SA1 Scope

SA1.1 These requirements are applicable to switchboards intended for use in the United States and cover the use in dead-front switchboards of components that are not Listed or Recognized by Underwriters Laboratories Inc. The switchboards are otherwise in compliance with the requirements of this standard.

SA1.2 In a switchboard containing a transfer switch or where multiple sources are intended for parallel operation as covered in 8.6.5.1 – 8.6.5, the requirements in this Annex are not applicable to a component that functions:

a) to cause the opening of a circuit in the case of over-current, short circuit, or a ground fault;

b) in a synchronizing circuit intended to preclude paralleling sources that are not in synchronization; or

c) in a generator control in a manner such that the generator might be prevented from being on line if the component malfunctioned.

SA1.3 Components covered under this program include a switching device, relay, or a similar component that controls loads or other devices within the switchboard, but do not include an external power-consuming product such as a motor, heater, or the like other than as covered in SA2.4.

SA2 Conditions of Use

SA2.1 A component may be used without further investigation in a control circuit if all of the following conditions are met:

a) An uninvestigated control device is contained within the switchboard enclosure.

Exception: An uninvestigated component may extend through an opening in the switchboard enclosure if the component housing material is fabricated from:

a) A polymeric material, the area of which does not exceed 194 cm^2 (30 square inches), or

b) Metal and glass of which the area of exposed glass does not exceed 645 cm^2 (100 square inches).

b) With respect to 8.2.1.3.1 and 8.1.16.5, the uninvestigated component is treated as an arcing part.

c) All other inputs to or outputs from the uninvestigated component are through UL Listed or Recognized components as shown in SA2.2 – SA2.4 and Figure SA2.1.

d) Records are maintained as covered in SA5.1(c) and in SA5.2.

SA2.2 With respect to items D, E, and F of Figure SA2.1, the following conditions shall be met:

a) The circuit shall be supplied by a Listed or Recognized transformer, with isolated secondary rated 115 – 120 or 230 – 240 V nominal supplying a load not in excess of its rating.

b) One side of the secondary circuit shall be grounded.

c) The secondary circuit shall be overcurrent protection as indicated in Overcurrent Protection, SA3.

Document Was Downloaded By Trijot Sandhu For Use By Foxfab Power Solutions Inc Sandhu, Trijot : 3/21/2025 - 2:47 PM

ULSE INC. COPYRIGHTED MATERIAL – NOT AUTHORIZED FOR FURTHER REPRODUCTION OR DISTRIBUTION WITHOUT PERMISSION FROM ULSE INC.

d) The secondary circuit shall be protected by a Listed, Class A (6 mA trip) circuit breaker and ground fault circuit interrupter (CBGFCI) as indicated in Circuit Breaker and Ground Fault Circuit Interrupter, SA4.

Exception: Instead of CBGFCI, the ground fault circuit interrupter may be Listed "receptacle-style" ground fault circuit interrupter of the feed through type (mounted in the intended manner) with the load connected to terminals (not plugged into receptacle). Marking on or adjacent to the receptacle (if any) indicates that the receptacle is not to be used for external connections. If the ground fault circuit interrupter has a receptacle, it shall be mounted such that the receptacle is not accessible to the user from the outside of the enclosure.

e) The switchboard shall have a marking that states:

1) "WARNING – Use of the following components is dependent upon the additional protection afforded by the ground fault circuit interrupter and the overcurrent protective device provided. Do not remove or defeat these protective devices." and

2) that the ground fault circuit interrupter should be checked periodically for intended operation.

Document Was Downloaded By Trijot Sandhu For Use By Foxfab Power Solutions Inc Sandhu, Trijot : 3/21/2025 - 2:47 PM

ULSE INC. COPYRIGHTED MATERIAL – NOT AUTHORIZED FOR FURTHER REPRODUCTION OR DISTRIBUTION WITHOUT PERMISSION FROM ULSE INC.

Figure SA2.1
Uninvestigated component

(See Clauses SA2.1(c), SA2.2, SA2.3 and SA2.4)

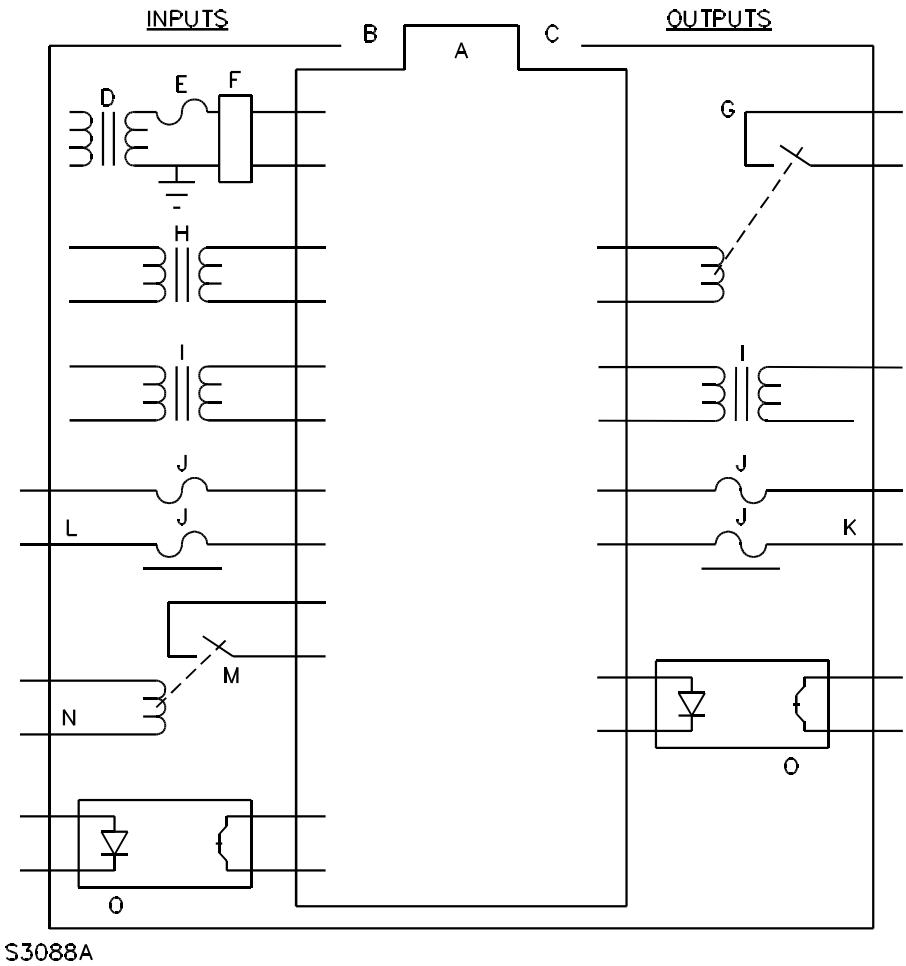

A – Component not Listed or Recognized by UL.

B – Switchboard enclosure.

C – Component may extend through switchboard enclosure – see the Exception to SA2.1(a).

D – Listed or Recognized Component transformer with a 115 – 120 or 230 – 240 V secondary.

E – Fuse or circuit breaker sized in accordance with SA3.1 or Table SA3.1.

F – Listed or Recognized Component ground fault circuit interrupter. See SA2.1(d) or SA4.1. See also marking in SA2.2(e)(1).

G – Listed or Recognized Component relay. Marking provided to give relay contact rating.

H – Listed or Recognized Component current transformer.

I – Listed or Recognized Component Class 2 transformer. See 2.4.1.1(a). A Listed or Recognized Class 3 transformer may also be used for an input.

J – Listed or Recognized Component fuse, rated 0.5 A maximum. If the input circuit is not grounded or if it is not known if the output circuit is grounded, both lines of the involved circuit shall be fused. A fuse shall not be provided in a grounded circuit. Marking provided in accordance with SA2.4.

K – To a switch or other load. Marked to indicate maximum of 30 V dc or 30 V rms.

L – Marking provided in accordance with SA2.3.

M – Listed or Recognized Component relay.

N – Marking to indicate coil voltage rating of relay.

O – Recognized Component opto-isolator with 2 500 V rated isolation voltage.

Document Was Downloaded By Trijot Sandhu For Use By Foxfab Power Solutions Inc Sandhu, Trijot : 3/21/2025 - 2:47 PM

ULSE INC. COPYRIGHTED MATERIAL – NOT AUTHORIZED FOR FURTHER REPRODUCTION OR DISTRIBUTION WITHOUT PERMISSION FROM ULSE INC.

SA2.3 With respect to item L of Figure SA2.1, if a circuit is intended to be supplied by a source located external to the switchboard, it may be directly connected to an uninvestigated component within the switchboard if the circuit is connected through a one-half ampere fuse as covered in item J of Figure SA2.1 and involves a potential not exceeding 30 V between live parts of opposite polarity and between a live part and ground. Field wiring terminals provided for the connection of such circuits shall be permanently marked in the area adjacent to the terminals with the word "CAUTION" and the following or the equivalent: "Risk of electric shock. Connections to these terminals shall not involve a potential greater than 30 V between live parts of opposite polarity and between a live part and ground."

SA2.4 With respect to items J and K of Figure SA2.1, if the control circuit is intended to be connected to an external switch or load, all ungrounded conductors that extend beyond the enclosure are to be protected by a fuse rated not more than 0.5 A. The fuse shall be located within the enclosure and as close as is practical to the field wiring terminals. A permanent marking shall be provided near the fuse with the word "CAUTION" and the following or the equivalent: "Risk of fire. Replace only with same type and rating of fuse." The circuit supplied by a source originating from the uninvestigated component shall have a potential of 30 V or less between live parts of opposite polarity and between a live part and ground.

SA3 Overcurrent Protections

SA3.1 The overcurrent protection required shall be as indicated in Table SA3.1 (which is an expansion of Table 130 F of Electrical Standard for Metalworking Machine Tools, NFPA 79, to include a nominal 230 V secondary).

Table SA3.1
Required overcurrent protection

(See Clause SA3.1 and Figure SA2.1, Note E)

Control transformer size in volt-ampere	Maximum rating of overcurrent device, amperes	
	115 – 120 V	230 – 240 V
50	0.5	0.25
100	1.0	0.5
150	1.6	0.8
200	2.0	1.0
250	2.5	1.25
300	3.2	1.6
500	5	2.5
750	8	4
1 000	10	5
1 250	12	6
1 500	15	7.5
2 000	–	10
3 000	–	15

[a] If a larger transformer is used to supply one or more circuits in addition to the uninvestigated circuit, the uninvestigated circuit is protected at not more than 15 A and the total secondary is protected at not more than 125 percent of the secondary current rating of the transformer.

SA4 Circuit Breaker and Ground Fault Circuit Interrupter

SA4.1 The CBGFCI referred to in Condition of Use, Section SA2, shall be provided to interrupt the electrical circuit to the load when a fault current to ground exceeds 6 milliamperes. If a relay is used with a CBGFCI in a 3-phase, 4-wire secondary circuit, the combination shall comply with the requirements for ground-fault circuit-interrupters, UL 943.

Document Was Downloaded By Trijot Sandhu For Use By Foxfab Power Solutions Inc Sandhu, Trijot : 3/21/2025 - 2:47 PM

ULSE INC. COPYRIGHTED MATERIAL – NOT AUTHORIZED FOR FURTHER REPRODUCTION OR DISTRIBUTION WITHOUT PERMISSION FROM ULSE INC.

SA5 Tests and Records By the Manufacturer

SA5.1 The manufacturer shall comply with (a) – (c) as follows:

a) conduct appropriate tests to determine that the ground fault circuit interrupter will protect against all likely ground faults,

b) review the application to determine that the overcurrent protection will protect against possible short circuits, and

c) maintain records of the use of non-Listed or non-Recognized components for periodic review and determination by UL personnel of when added detailed investigation of the component shall be required, such as for those components that have repeated use.

SA5.2 Records of non-Listed or non-Recognized component usage shall be maintained in the form shown in Table SA5.1 or the equivalent.

Table SA5.1
Record of use

(See SA5.2)

Component designation	Component, manufacturer's name	Catalog designation	Number used	Switchboard identification	Date	Ground fault testing
Relay, pilot light, or the like				Name, wiring diagram, or the like		

Document Was Downloaded By Trijot Sandhu For Use By Foxfab Power Solutions Inc Sandhu, Trijot : 3/21/2025 - 2:47 PM

ULSE INC. COPYRIGHTED MATERIAL – NOT AUTHORIZED FOR FURTHER REPRODUCTION OR DISTRIBUTION WITHOUT PERMISSION FROM ULSE INC.

1603 Orrington Ave, Suite 2000
Evanston, Illinois 60201
224.714.4901

Document Was Downloaded By Trijot Sandhu For Use By Foxfab Power Solutions Inc Sandhu, Trijot : 3/21/2025 - 2:47 PM